9.1 Introduction

A register is simply a group of flip-flops connected together in such a way that binary information can be stored. As we know that a single flip-flop can store 1-bit of binary information. Therefore, to store n-bit of binary information, the register must have n flip-flops.

In register, the data can be entered in serial or parallel form and can also be retrieved in serial or parallel from. Accordingly, registers are of four types:

1. Serial-in, Serial-out (SISO)
2. Serial-in, Parallel-out (SIPO)
3. Parallel-in, Parallel-out (PIPO)
4. Parallel-in, Serial-out (PISO).

9.2 Serial-in, Serial-out Shift Register

In this type of shift register, the data are entered and retrieved serially, that is, one bit at a time. Fig.1 shows the logic diagram of a 3-bit serial-in, serial-out shift register.

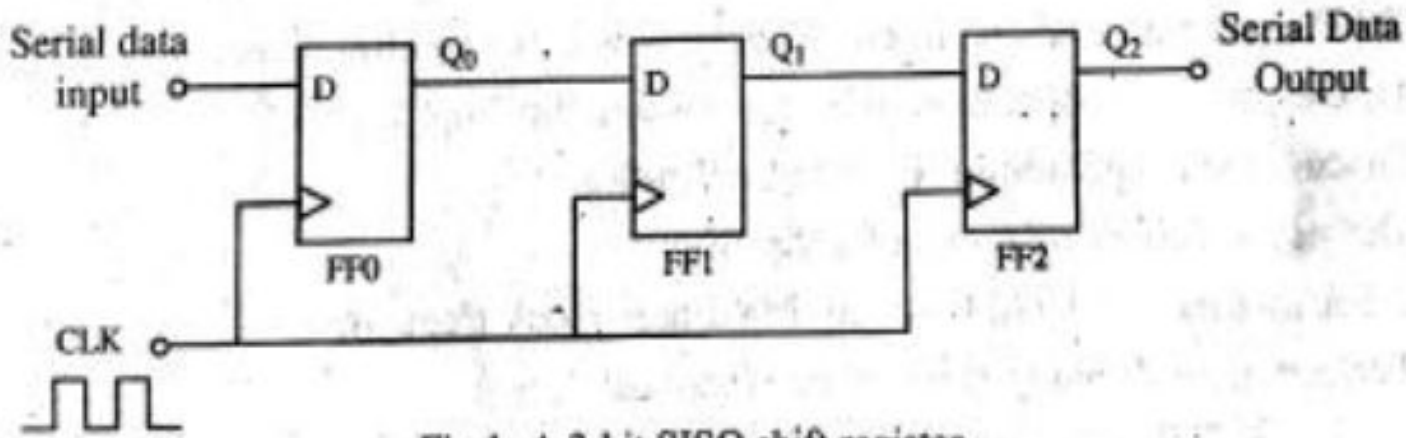

Fig.1: A 3-bit SISO shift register

The shift register of Fig.1 has been implemented with three D-type flip-flops. Thus, it can store only 3-bit of binary information. Suppose that the data 110 are to be entered and then taken out of the register.

Serial input: The data to be stored in the register is 110.

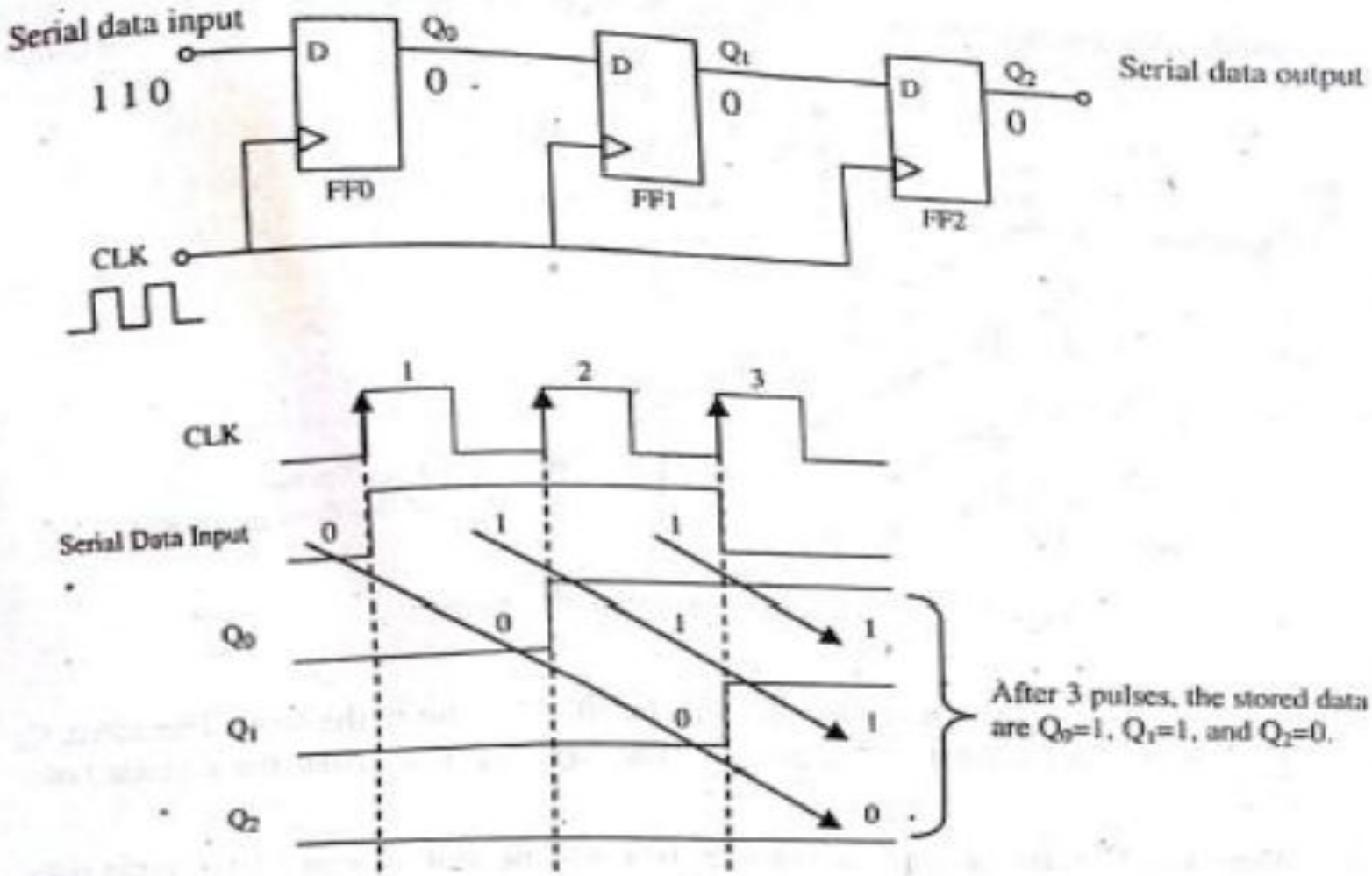

Fig.2: Timing diagram for Serial Data 110

Initially, all the flip-flops are cleared.

i. When the first clock pulse is applied, the first bit (0) is shifted to Q_0.

ii. When the 2nd pulse is applied, Q_0 is shifted to Q_1 and the 2nd bit (1) is shifted to Q_0.

iii. When the third clock pulse is applied, Q_1 is shifted to Q_2, Q_0 is shifted to Q_1 and the 3rd bit (1) is shifted to Q_0.

Therefore, three clock pulses (equal to the number of FFs) are needed to store the data 110 in the register.

Serial output:

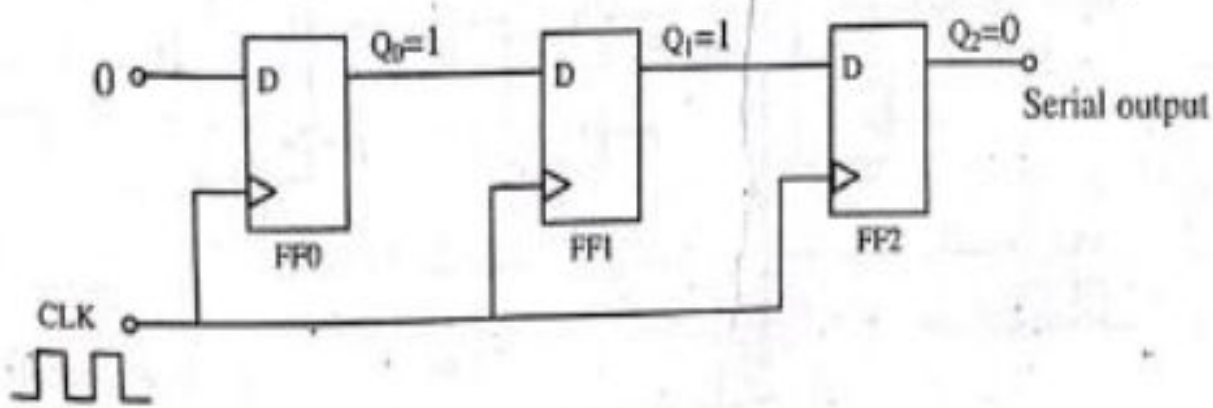

The data stored in the register are 110.

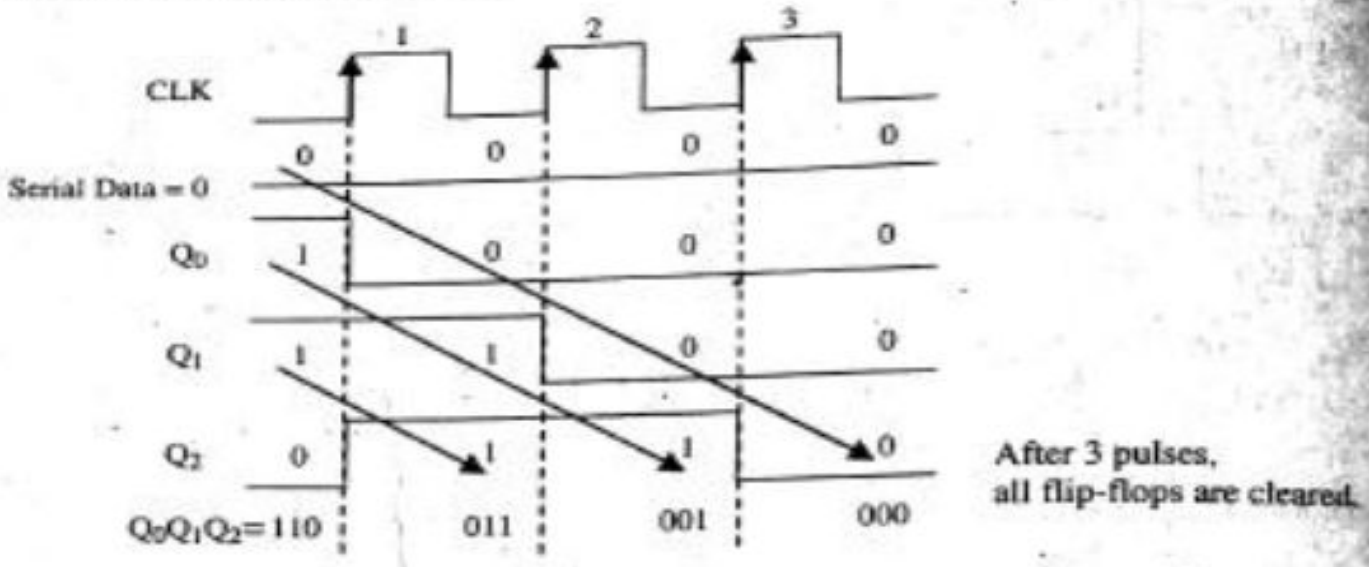

Fig. 3: Timing diagram for Serial Data output.

i. After 1st clock pulse, the data (110) will be shifted 1-bit to the right. Therefore, Q_2 will be lost and a 0-bit will enter into the first flip-flop. Now the register holds 011.

ii. When the 2nd pulse is applied, the data 011 will be shifted again 1-bit to the right. So, the register will holds now 001.

iii. When the 3rd pulse is applied, the data 001 will again be shifted 1-bit to the right. Now the register will hold 000. Therefore, three pulses (equal to the no. of FFs) are needed to take the data out of the register.

8.3 Serial-in, Parallel-out Shift Register

A Serial-in, Parallel-out shift register is similar to the SISO shift register in that it accepts data serially, that is, one bit at a time. It is different in that the output of each flip-flop is available simultaneously. Therefore, SIPO shift register converts data from serial format to parallel format. Fig.4 shows a 3-bit SIPO shift register.

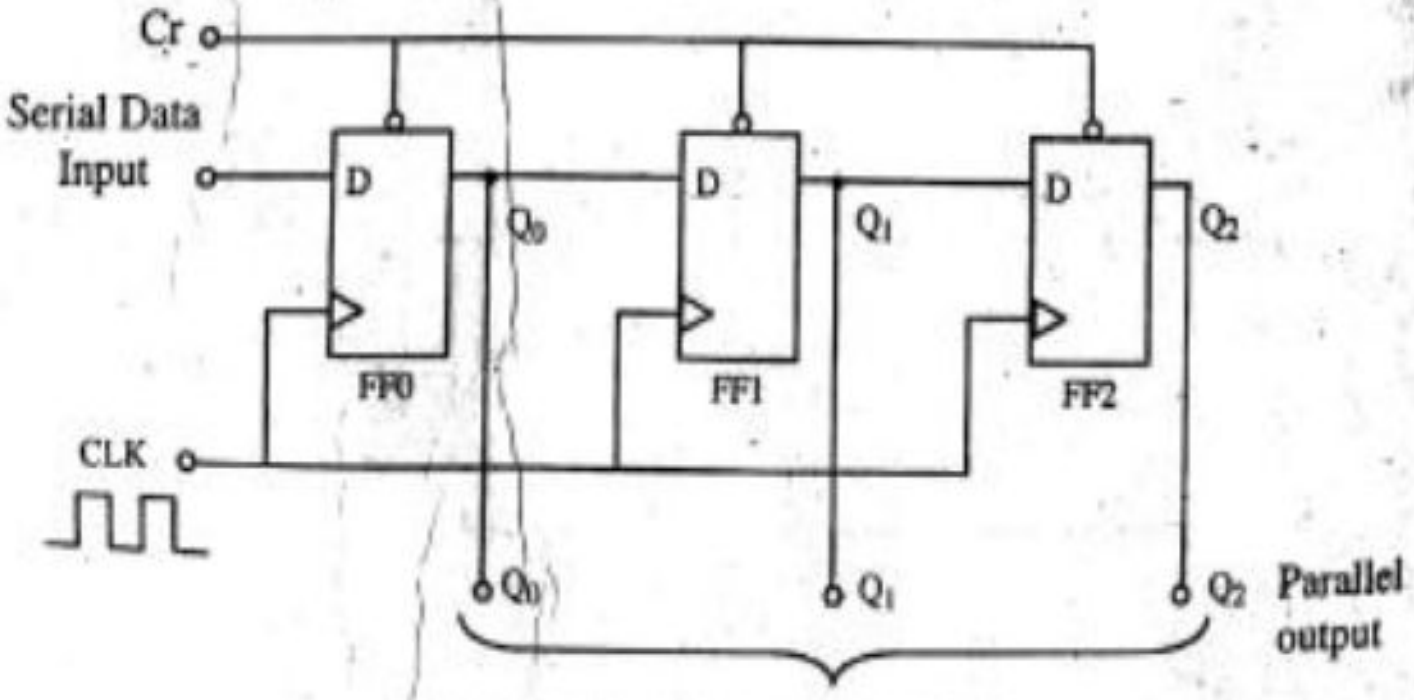

Fig.4: A 3-bit SIPO shift register

Serial input: Suppose, the data to be inputted serially are 101. Before entering the data 101, clear all the flip-flops by setting C_r=0. Now set C_r=1 to enter the data 101 (Fig.5).

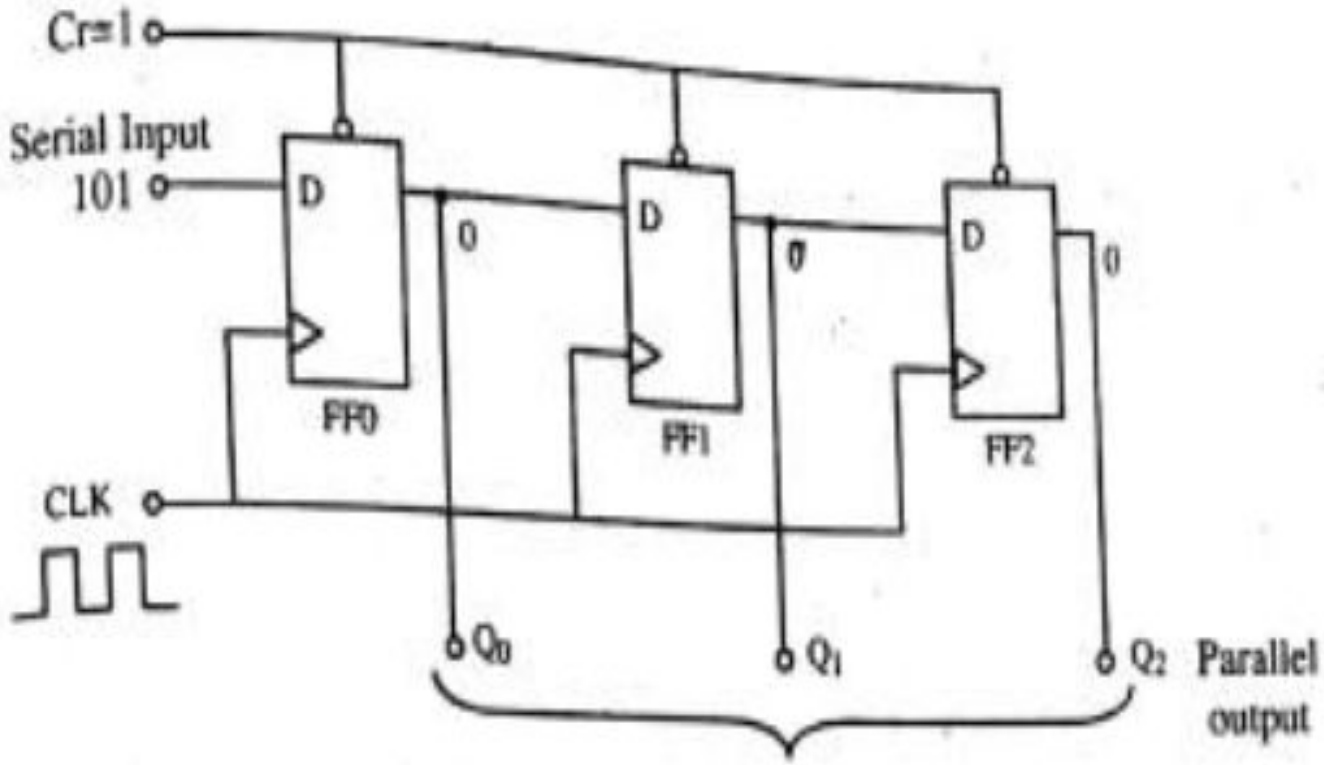

Fig.5

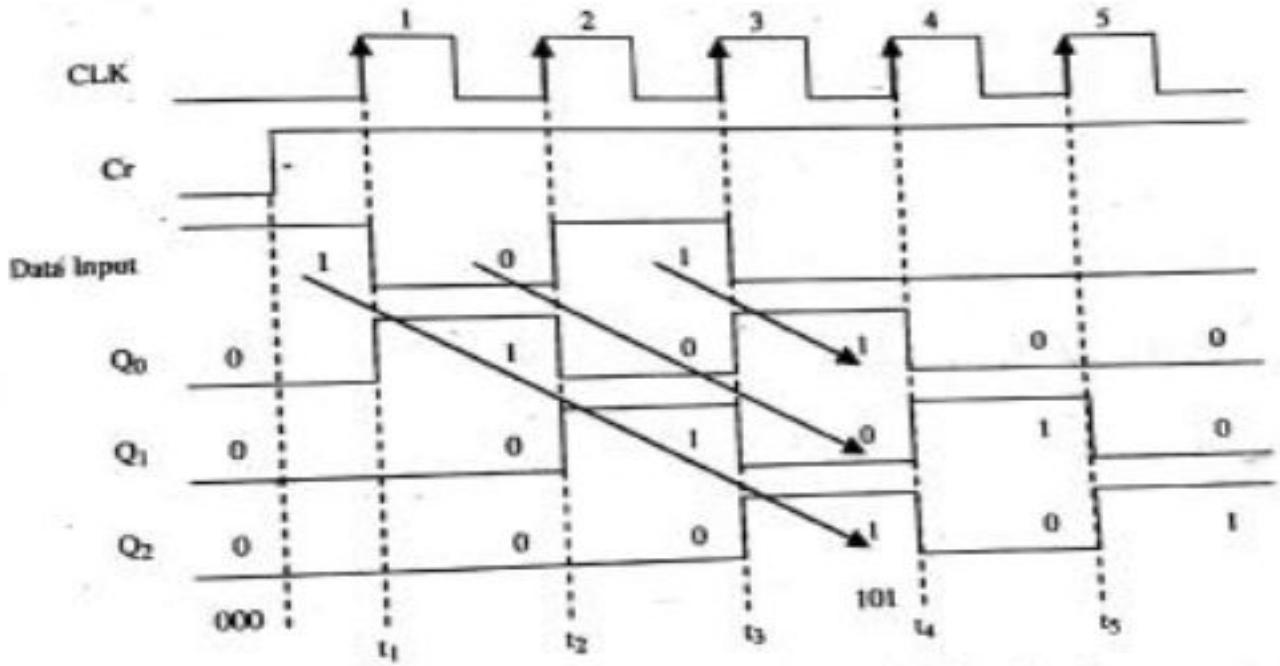

Fig.6: Timing diagram for Serial Data Input.

The shift register has been cleared prior to any data by C_r, an active LOW signal which clears all the D-type flip-flops within the register.

On the first clock pulse at t_1, the data at $Q_0Q_1Q_2$ (000) are shifted 1-bit to the right and the first bit at data input line enters the FF0. So, $Q_0Q_1Q_2$=100.

On the 2nd clock pulse at t_2, again $Q_0Q_1Q_2$ (100) are shifted 1-bit to the right and the 2nd bit at the data input line enters the FF0. So, $Q_0Q_1Q_2$=010.

Similarly, on the 3rd clock pulse at t_3, $Q_0Q_1Q_2$ (010) are shifted 1-bit to the right and the 3rd input bit enters the FF0. So, $Q_0Q_1Q_2$=101.

9.4 Parallel-in, Parallel-out Shift Register

Fig.7 shows a 3-bit parallel-in, parallel-out shift register.

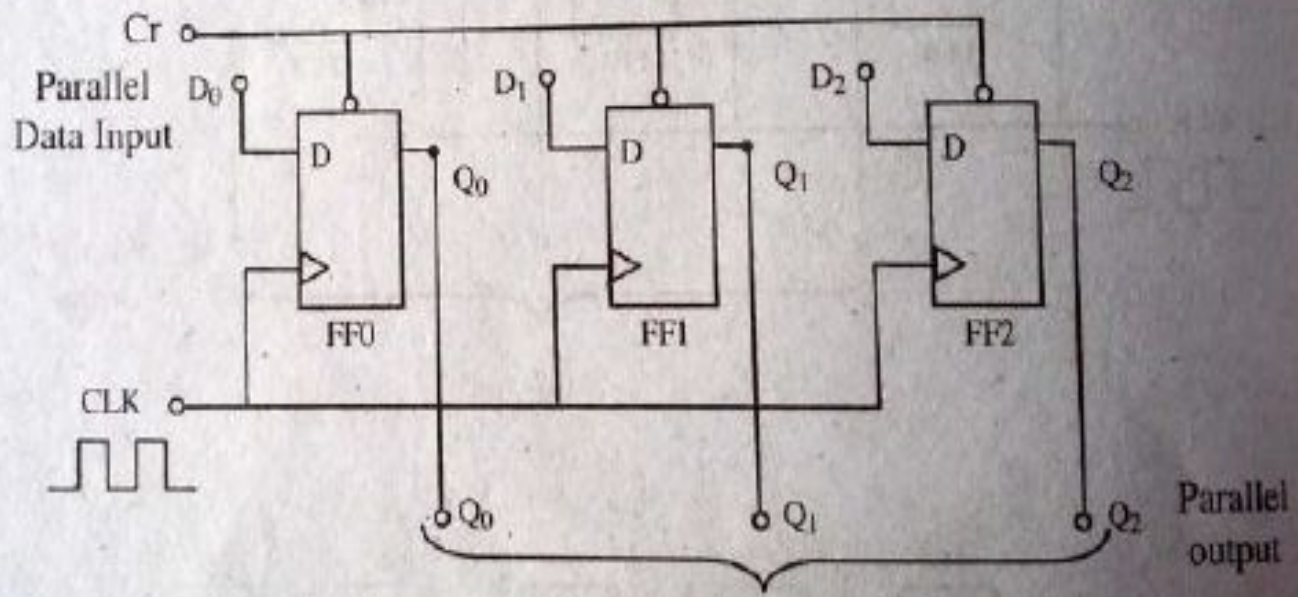

Fig.7: A 3-bit Parallel-in, Parallel-out shift register

The shift register has been cleared prior to any data by C_r signal, an active LOW signal, which clears all the flip-flops. Now apply parallel data at D_0, D_1, and D_2. This data is stored in the register when a clock pulse is applied and hence it is available at the output Q_0, Q_1, and Q_2 in parallel form.

Universal Shift Register

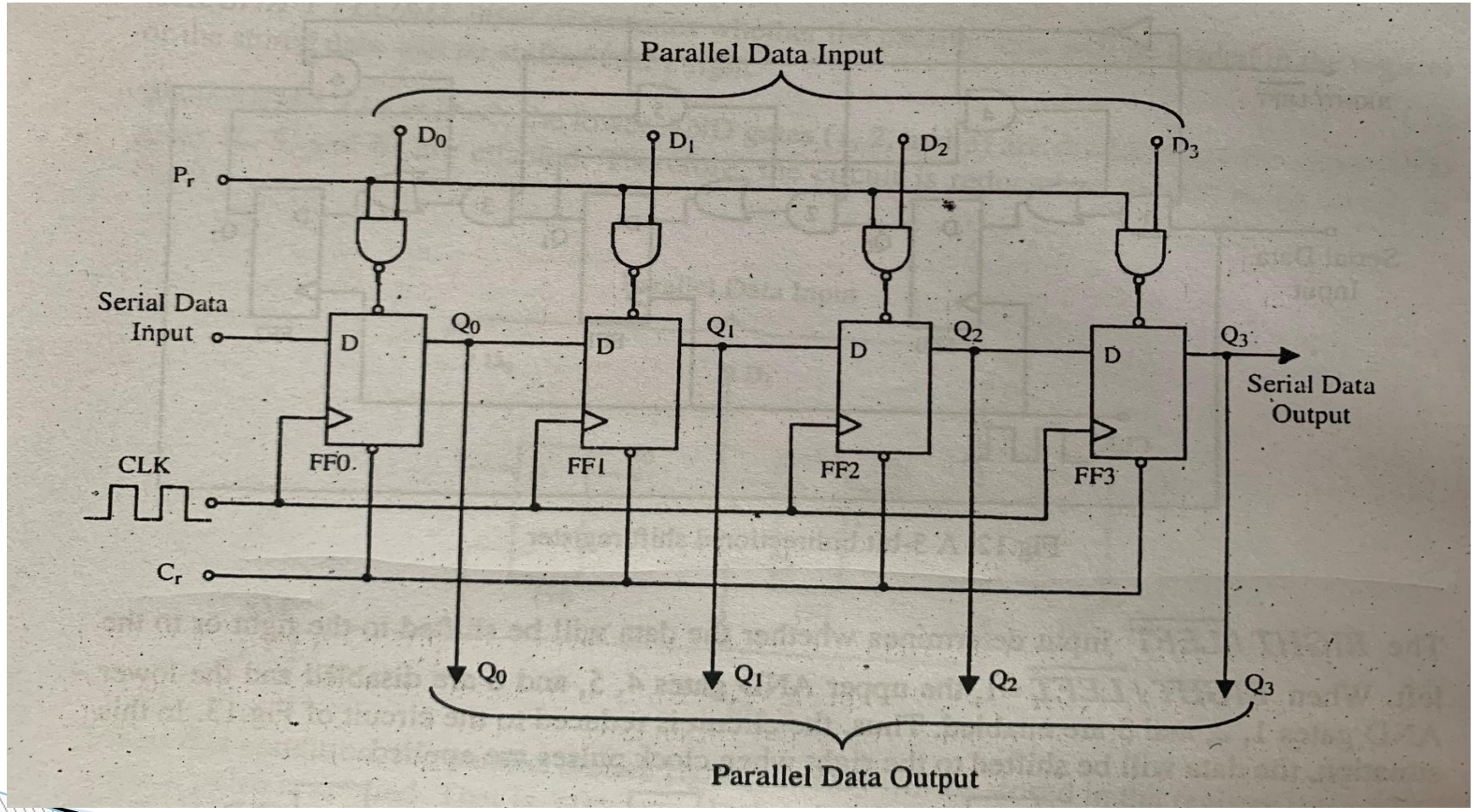

USR as a SISO or SIPO

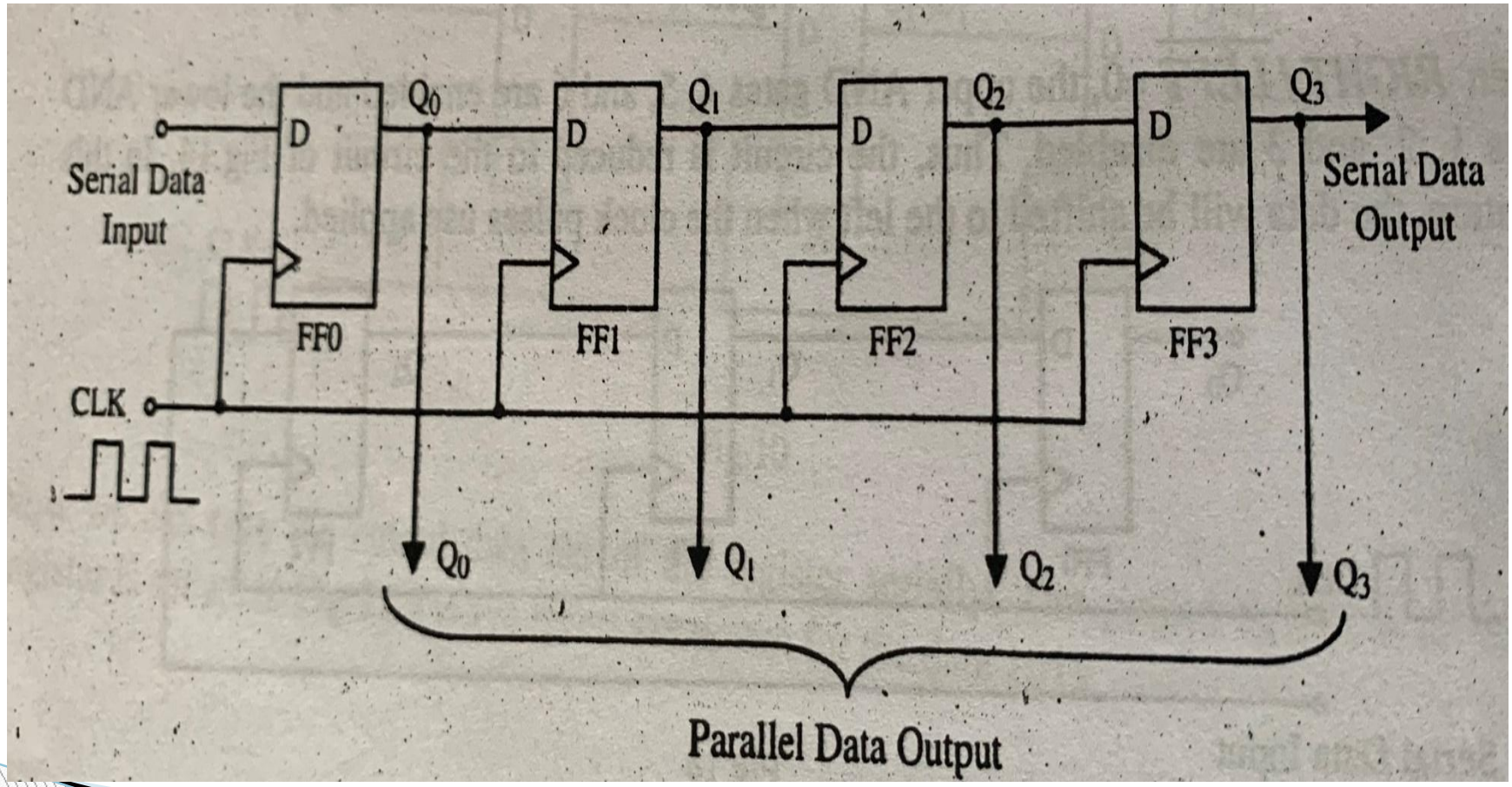

USR as a PIPO or PISO

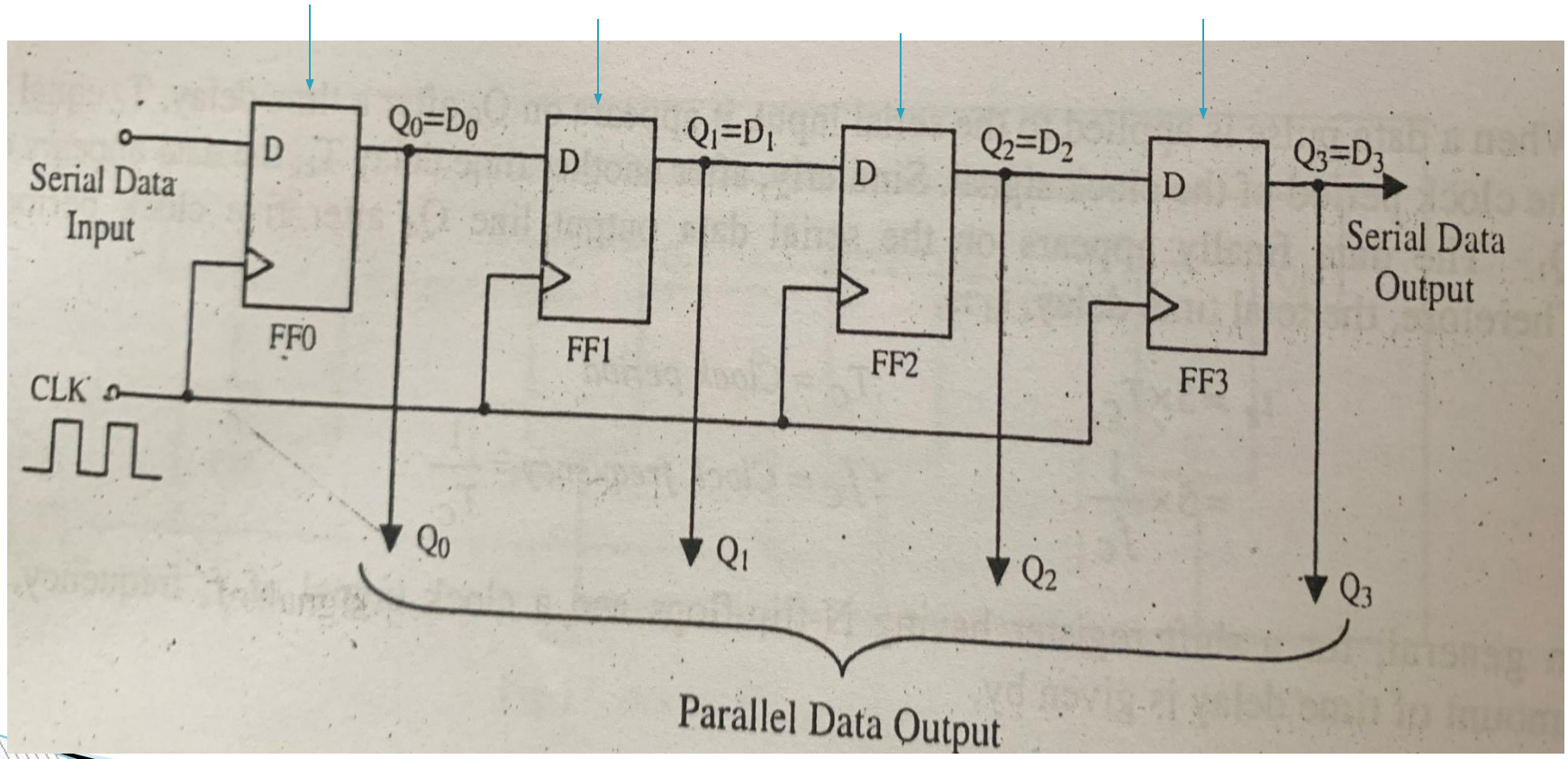

Shift Register Applications

- Time Delay Devices
- Series to Parallel Converter
- Parallel to Series Converter
- Ring Counter, Johnson Counter

Time Delay Device

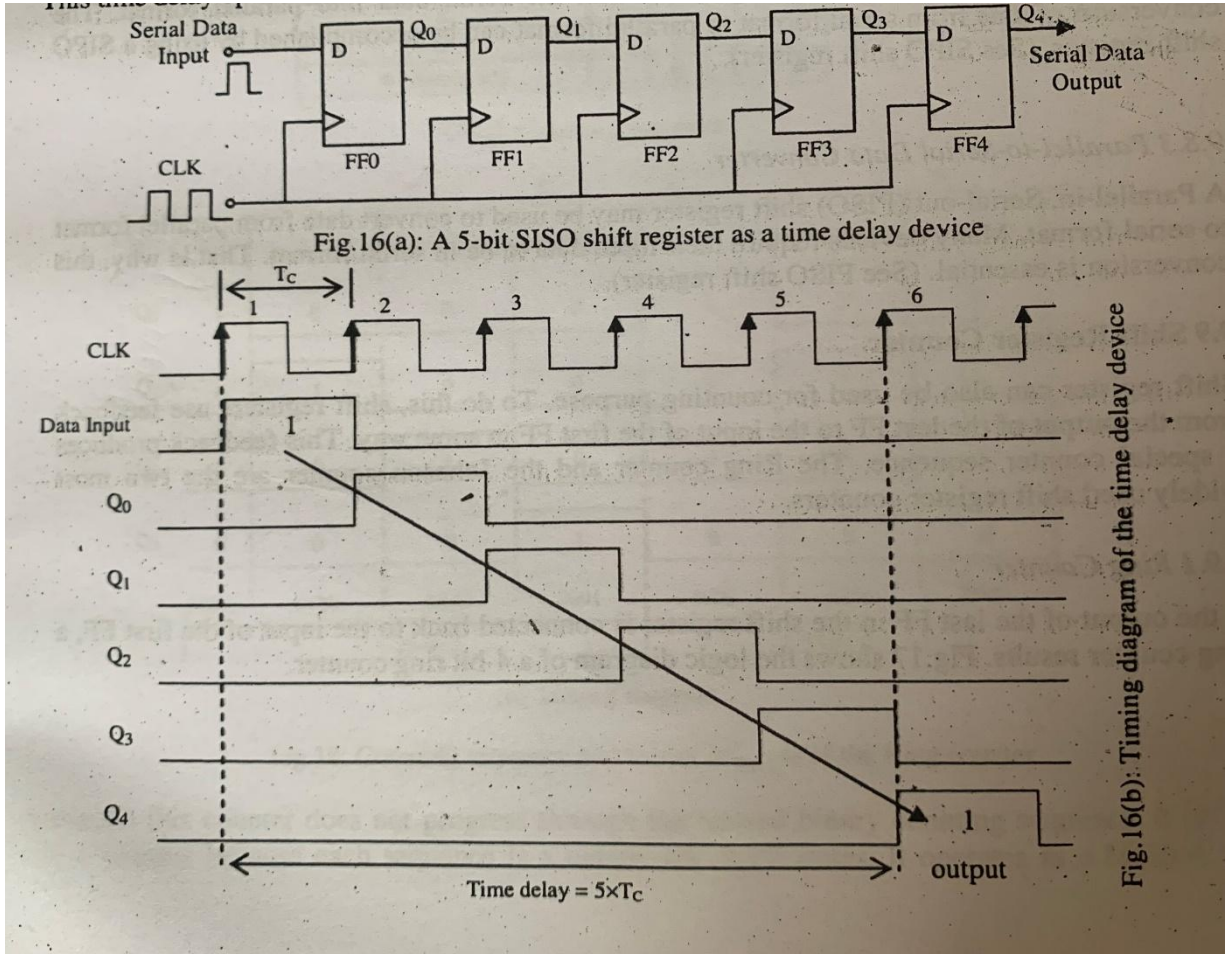

Ring Counter

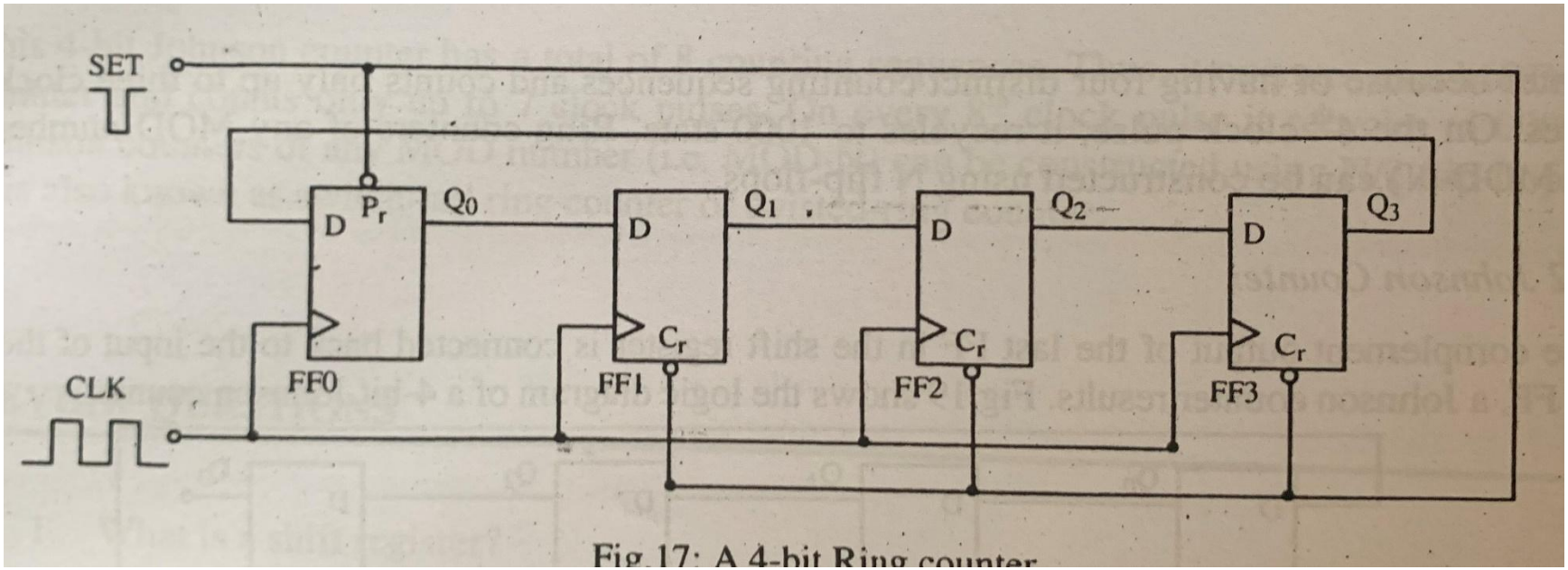

Fig.17: A 4-bit Ring counter

Initially, set the first FF to 1 and clear all other FFs by applying SET=0. That is, the register is initialized to 1000 state. This data pattern will now recirculate as long as clock pulses are applied. Fig.18 shows the counting sequence and the pulsed operation of the Ring counter.

Number of clock pulses	Output			
	Q_0	Q_1	Q_2	Q_3
Initially	1	0	0	0
1	0	1	0	0
2	0	0	1	0
3	0	0	0	1
4 (Recycle)	1	0	0	0

18.(a): Counting sequence

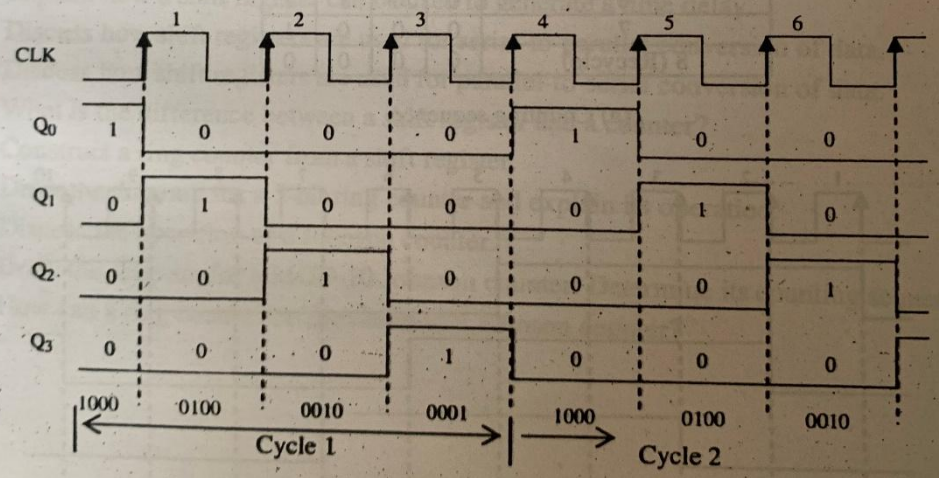

(b) Timing diagram

Johnson Counter

9.9.2 Johnson Counter

If the complement output of the last FF in the shift register is connected back to the input of the first FF, a Johnson counter results. Fig.19 shows the logic diagram of a 4-bit Johnson counter.

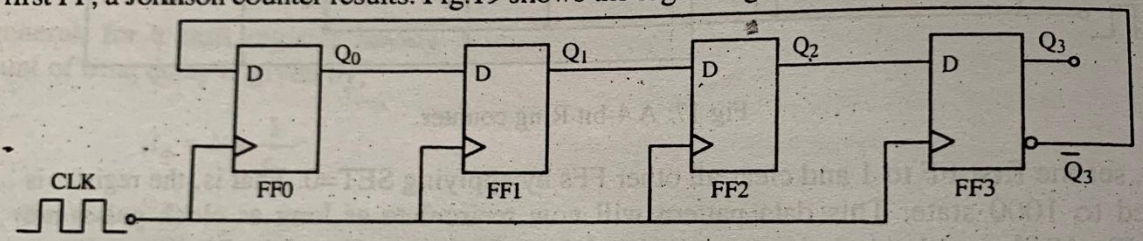

Fig.19: A 4-bit Johnson counter

Number of clock pulses	Output			
	Q_0	Q_1	Q_2	Q_3
Initially	0	0	0	0
1	1	0	0	0
2	1	1	0	0
3	1	1	1	0
4	1	1	1	1
5	0	1	1	1
6	0	0	1	1
7	0	0	0	1
8 (Recycle)	0	0	0	0

(a) Counting sequence

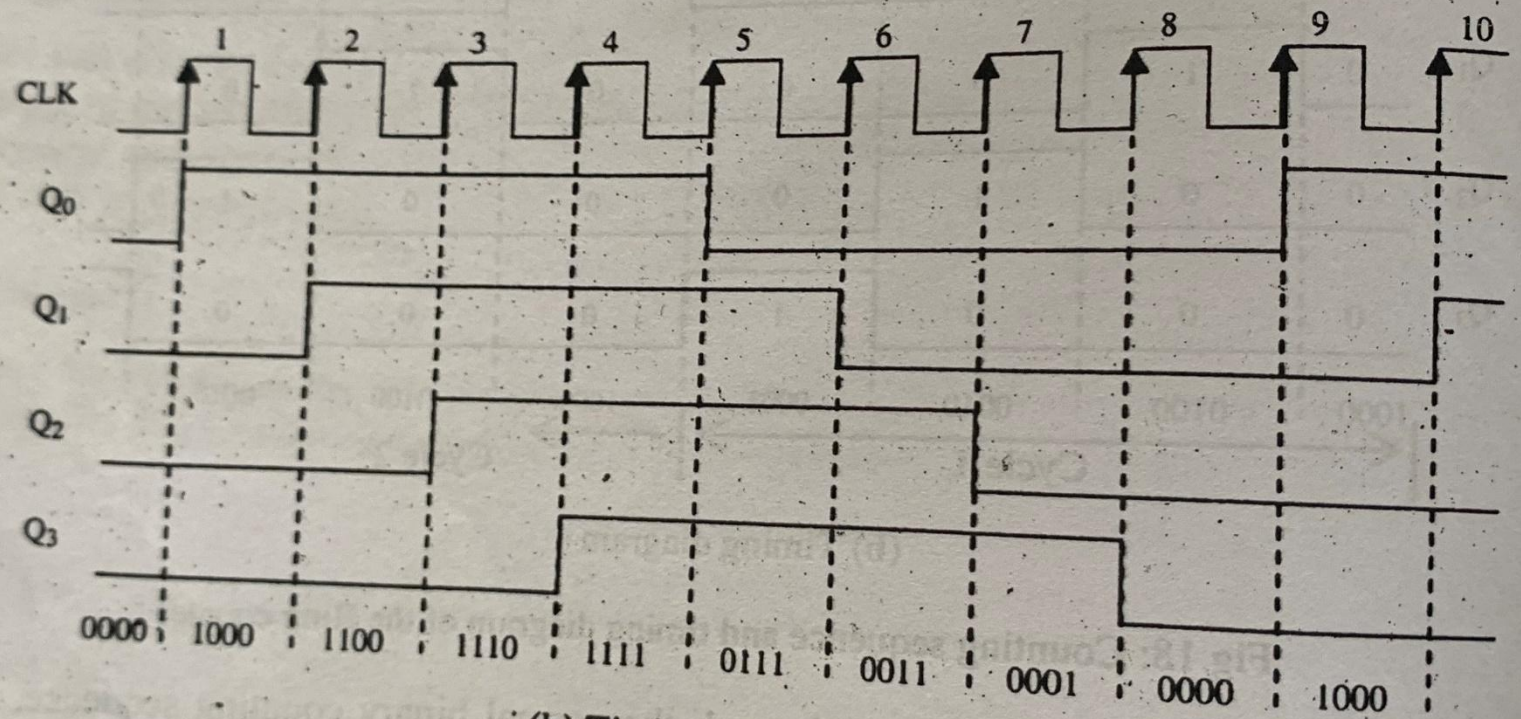

(b) Timing diagram

Fig.20: Counting sequence and timing diagram of the Johnson counter